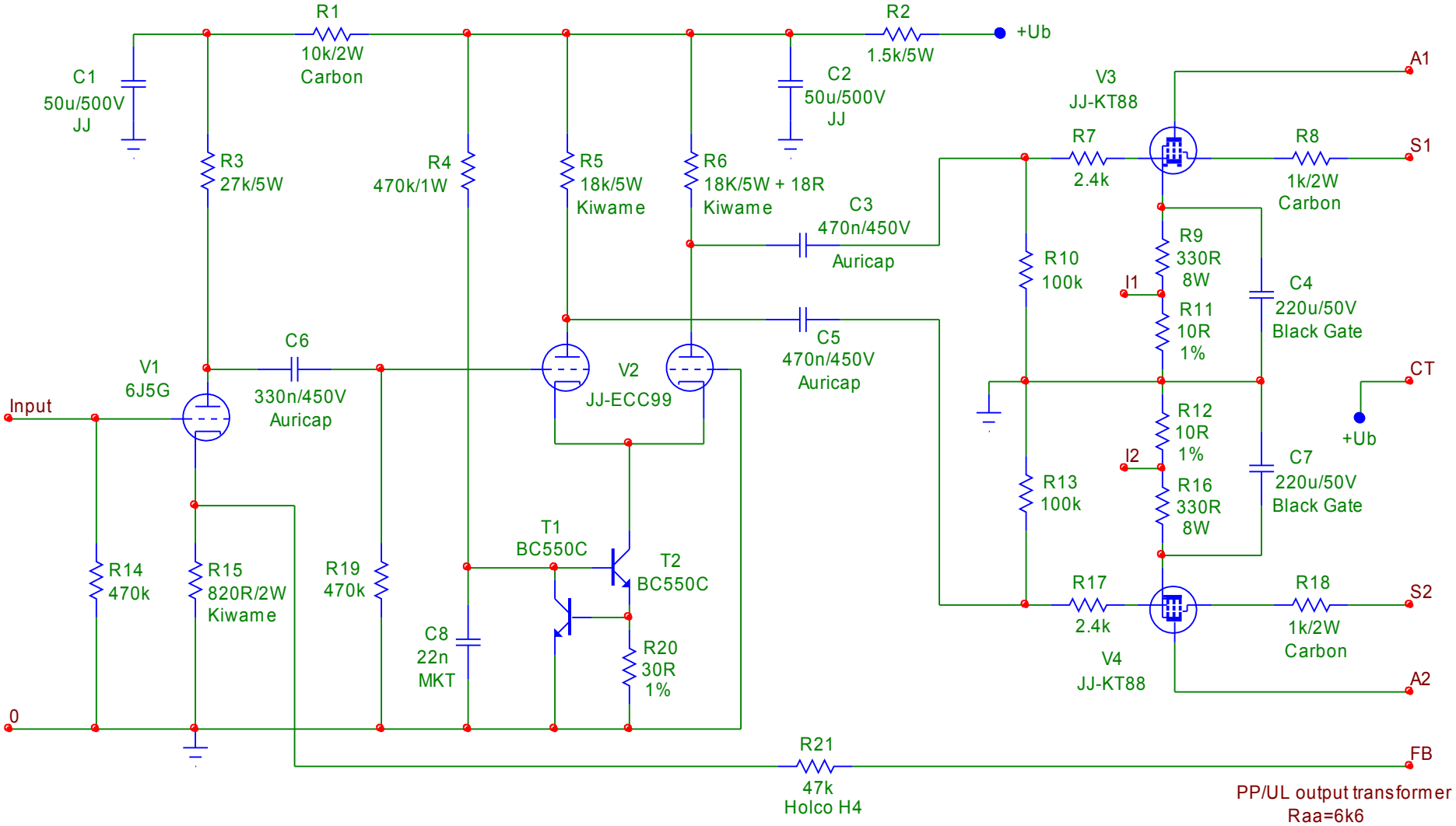
R1
10k/2W
Carbon
R2
1.5k/5W
+Ub
C1
50u/500V
JJ
C2
50u/500V
JJ
V3
JJ-KT88
A1
R7
2.4k
R8
1k/2W
Carbon
S1
R3
27k/5W
R4
470k/1W
R5
18k/5W
Kiwame
R6
18K/5W + 18R
Kiwame
C3
470n/450V
Auricap
R9
330R
8W
R10
100k
I1
C4
220u/50V
Black Gate
R11
10R
1%
C6
330n/450V
Auricap
V1
6J5G
Input
V2
JJ-ECC99
C5
470n/450V
Auricap
CT
+Ub
R12
10R
1%
I2
C7
220u/50V
Black Gate
R13
100k
R16
330R
8W
T1
BC550C
T2
BC550C
R14
470k
R15
820R/2W
Kiwame
R19
470k
C8
22n
MKT
R20
30R
1%
R17
2.4k
R18
1k/2W
Carbon
S2
V4
JJ-KT88
A2
0
R21
47k
Holco H4
FB
PP/UL output transformer
Raa=6k6